SPRAY DRYING

Spray drying is the process in which liquid is transformed into dried particles by spraying the feed into hot drying medium. The feed can either be a solution, suspension or paste. It is generally used to prepare milk, coffee and fruit juice powder.

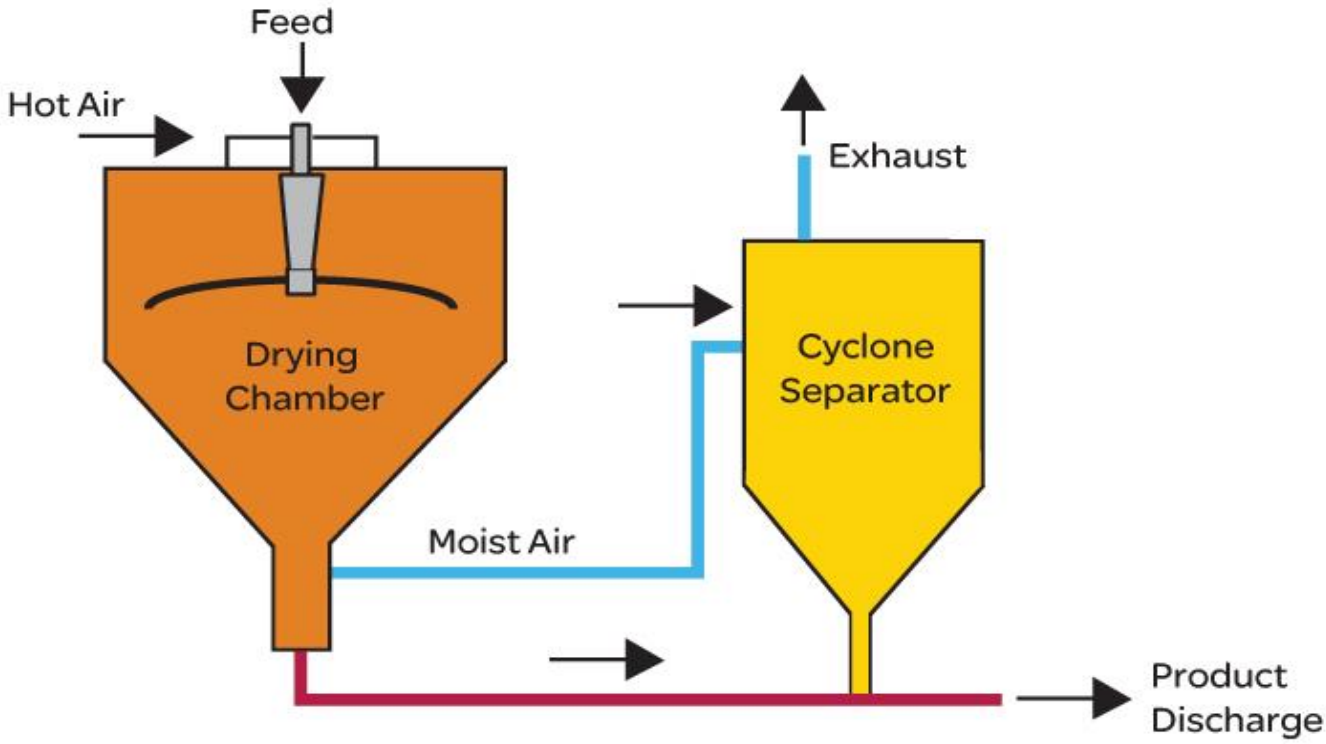

Fig 1 Spray Drying Process

Principle

There are three fundamental steps involved in spray drying.

1) Atomization of a liquid feed into fine droplets.

2) Mixing of these spray droplets with a heated gas stream, allowing the liquid to evaporate and leave dried solids.

3) Dried powder is separated from the gas stream and collected.

Spray drying involves the atomization of a liquid feedstock into a spray of droplets and contacting the droplets with hot air in a drying chamber.

The sprays are produces by either rotary (wheel) or nozzle atomizers. Evaporation of moisture from the droplets and formation of dry particles proceed under controlled temperature and airflow conditions. Powder is discharged continuously from the drying chamber. Operating conditions and dryer design are selected according to the drying characteristics of the product and powder specification.

Atomization

The atomizing device, which forms the spray, is the ’heart’ of the spray drying process.

Atomizer: Equipment that breaks bulk liquid into small droplets, forming a spray.

Prime functions of atomization are:

a. A high surface to mass ratio resulting in high evaporation rates,

b. Production of particles of the desired shape, size and density.

The aim of atomizing the concentrate is to provide a very large surface, from which the evaporation can take place. The smaller droplets, the bigger surface, the easier evaporation, and a better thermal efficiency of the dryer are obtained. The ideal from a drying point of view would be a spray of drops of same size, which would mean that the drying time for all particles would be the same for obtaining equal moisture content.

In order to produce top-quality products in the most economical manner, it is Crucial to select the right atomizer. Three basic types of atomizers are used commercially:

a. Rotary atomizer (atomization by centrifugal energy)

b. Pressure nozzle (atomization by pressure energy)

c. Two-fluid nozzle (atomization by kinetic energy)

Rotary atomizers: Atomization by centrifugal energy

Rotary atomizer uses the energy of a high speed-rotating wheel to divide bulk liquid into droplets. Feedstock is introduced at the center of the wheel, flows over the surface to the periphery and disintegrates into droplets when it leaves the wheel.

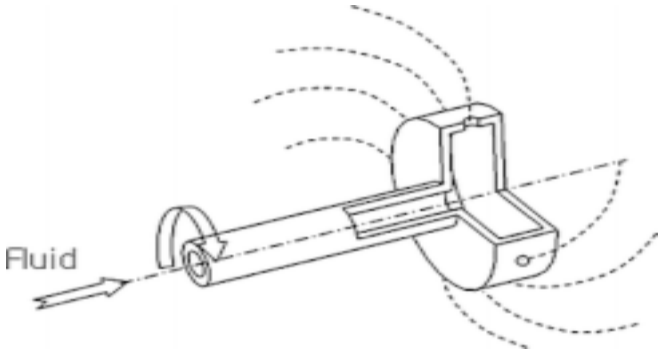

Fig 2 Rotary atomizer

Advantages of rotary atomizers:

-Great flexibility & ease of operation.

-Low pressure feed system.

-No blockage problems.
-Handling of abrasive feeds.
-Ease of droplet size control through wheel speed adjustment.

Disadvantages of rotary atomizers:

-Produce large quantities of fine particles, which can result in pollution control problems.
-High capital cost.
-Very expensive to maintain.
-Cannot be used in horizontal dryers.
-Difficult to use with highly viscous materials.

Because of the problems and costs associated with rotary atomizers, there is interest within segments of the spray dry industry in replacing rotary atomizers with spray nozzles.

Pressure nozzles: Atomization by pressure energy

Pressure nozzle is the most commonly used atomizer for spray drying. Nozzles generally produce coarse, free flowing powders than rotary atomizers. Pressure nozzles used in spray drying are called “vortex” nozzles because they contain features that cause the liquid passing through them to rotate. The rotating fluid allows the nozzle to convert the potential energy of liquid under pressure into kinetic energy at the orifice by forming a thin, high-speed film at the exit of the nozzle. The range of operating pressure range for pressure nozzles used in spray drying is from about 250 PSI (17.4 bar) to about 10,000 PSI (690 bar).

Fig 3 Pressure Nozzle Atomizer

Two-fluid or Pneumatic nozzles: Atomization by kinetic energy

Liquid feedstock and compressed air (steam) are combined in a two-fluid nozzle. The design utilizes the energy of compressed gas to atomize the liquid. Two

advantages of the two-fluid nozzle are its ability to produce very fine particles and to atomize highly viscous feeds. The range of operating pressure range for pressure nozzles used in spray drying is from about 250 PSI (17.4 bar) to about 10,000 PSI (690 bar).

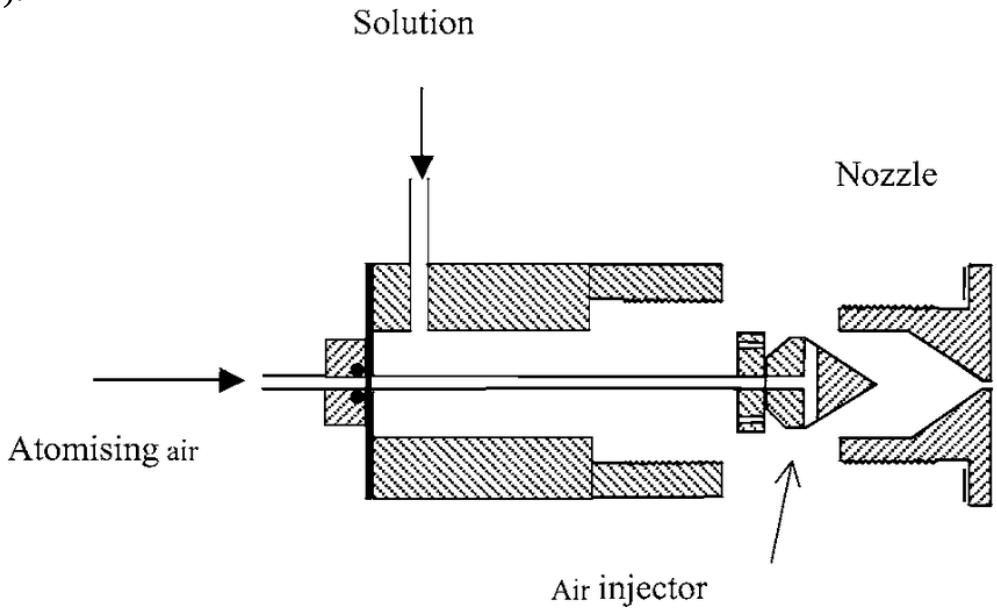

Fig 4 Two Fluid Atomizer

Mixing and drying

Once the liquid is atomized it must be brought into intimate contact with the heated gas for evaporation to take place equally from the surface of all droplets within the drying chamber. The heated gas is introduced into the chamber by an air disperser, which ensures that the gas flows equally to all parts of the chamber.

Air Disperser

The air disperser uses perforated plates or vaned channels through which the gas is directed, creating a pressure drop and, thereby, equalizing the flow in all directions. The air disperser is normally built into the roof of the drying chamber and the atomization device is placed in or adjacent to the air disperser. This arrangement allows instant and complete mixing of the heated drying gas with atomized cloud of droplets.

The drying chamber

The largest and most obvious part of a spray-drying system is the drying chamber. Selecting these dimensions is based on two process criteria that must be met.

First, the vessel must be of adequate volume to provide enough contact time between the atomized cloud and the heated glass.

The second criterion is that all droplets must be sufficiently dried before they contact a surface.

Drying chambers are usually constructed of stainless steel sheet metal, with stiffeners for structural support and vessel integrity. Sheet steel finish and weld polish can be specified to meet any requirement. Insulation is usually applied to the outside of the vessel, and stainless steel wrapping is seam-welded over the entire vessel. This provides a thermally efficient and safe system that is easy to clean has no crevice areas that might become contaminated.

Powder separation

In almost every case, spray-drying chambers have cone bottoms to facilitate the collection of the dried powder. When the coarse powder is to be collected, they are usually discharged directly from the bottom of the cone through a suitable airlock, such as a rotary valve. The gas stream, now cool and containing all the evaporate moisture, is drawn from the center of the cone above the cone bottom and discharge through a side outlet. In effect, the chamber bottom is acting as a cyclone separator. Because of the relatively low efficiently of collection, some fines are always carried with the gas stream. This must be separated in high-efficiency cyclones, followed by a wet scrubber or in a fabric filter (bag collector). Fines are collected in the dry state (bag collector) are often added to the larger powder stream or recycled.

Parameters to be controlled

The spray-dried products have important properties like-Uniform Particle size,

-Nearly spherical regular particle shape,

-Excellent Flow ability,

-Improved Compressibility,

-Low Bulk Density,

-Better Solubility,

-Reduced Moisture Content,

-Increased Thermal stability, and suitability for further applications.

Advantages of spray drying

1. It can be designed to virtually any capacity required. (Feed rates range from a few pounds per hour to over 100 tons per hour).
2. The actual spray drying process is very rapid, with the major portion of evaporation taking place in less than a few seconds.
3. As long as they are can be pumped, the feedstock can be in solution, slurry, paste, gel, suspension or melt form.
4. Adaptable to fully automated control system that allows continuous monitoring and recording of very large number of process variables simultaneously.
5. Wide ranges of spray dryer designs are available to meet various product specifications.

6. It has few moving parts and careful selection of various components can result in a system having no moving parts in direct contact with the product, thereby reducing corrosion problems.
7. It can be used with both heat-resistant and heat sensitive products.
8. Offers high precision control over Particle size, Bulk density, Degree of crystallinity, organic volatile impurities and residual solvents.
9. Powder quality remains constant during the entire run of the dryer. Nearly spherical particles can be produced, uniform in size and frequently hollow, thus reducing the bulk density of the product.

Disadvantages of spray drying

1. The equipment is very bulky and with the ancillary equipment is expensive.
2. The overall thermal efficiency is low, as the large volumes of heated air pass through the chamber without contacting a particle, thus not contributing directly to the drying.

Types of spray dryer systems

On the basis of the type of flow

Co-current flow dryer

In the co-current flow dryer, the spray is directed into the hot air entering the dryer and both pass through the chamber in the same direction.
Spray evaporation is rapid and the temperature of the drying air is quickly reduced by the vaporization of water.

Counter-current flow dryer

In this dryer design, the spray and the air are introduced at opposite ends of the dryer, with the atomizer positioned at the top and the air entering at the bottom. A counter-current dryer offers more rapid evaporation and higher energy efficiency than a co-current design. Because the driest particles are in contact with hottest air, this design is not suitable for heat-sensitive products.

Mixed flow dryer

Dryers of this type combine both co-current and counter current flow. In a mixed flow dryer, the air enters at the top and the atomizer is located at the bottom. Like the counter-current design, a mixed flow dryer exposes the driest particles to the hottest air, so this design is not used with heat-sensitive products.

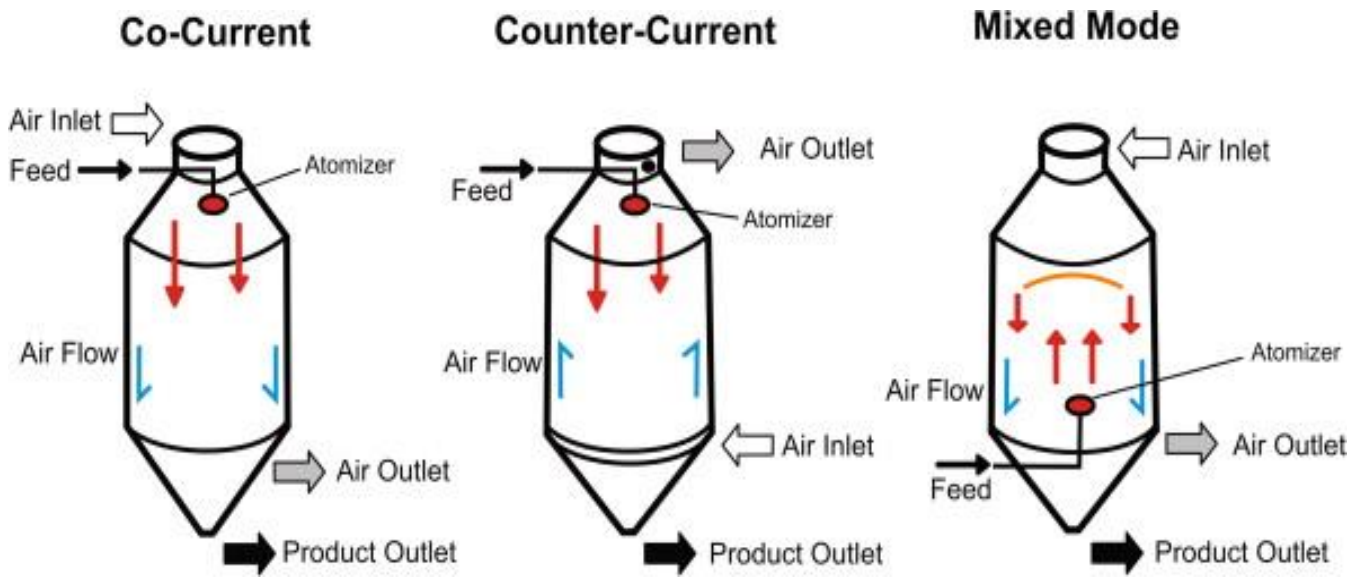

Fig 5 Types of spray dryers